CNC 101-60

Industrial Cable Crushing Machine

Technical Specifications
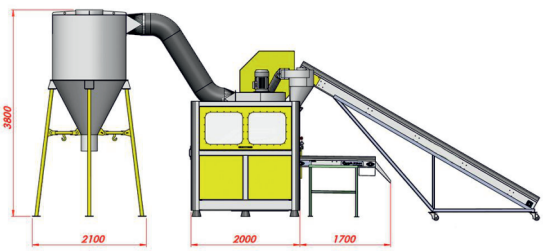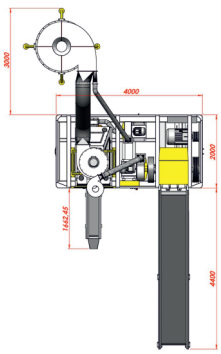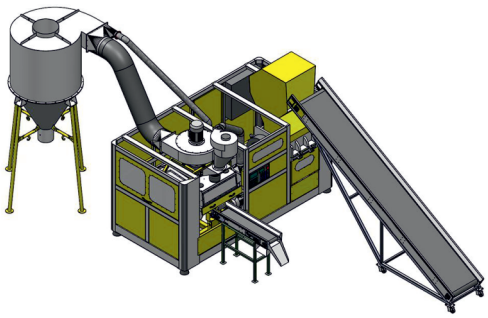
PRODUCT MODEL	CNC 101-60
DIMENSIONS (W X L X H)	200 x 400 x 305 cm
PRODUCTION CAPACITY	800 Kg/h – 1000 Kg/h (With standard feeding)
BLADE CONFIGURATION	25 Rotating Blades - 2 Fixed Blades
MOTOR POWER	45 Kw – 50 Hp
TOTAL WEIGHT	5500 Kg